# Installation Instructions

## 7244F and 7245F
## 1-1/2” Offset Top Pivot

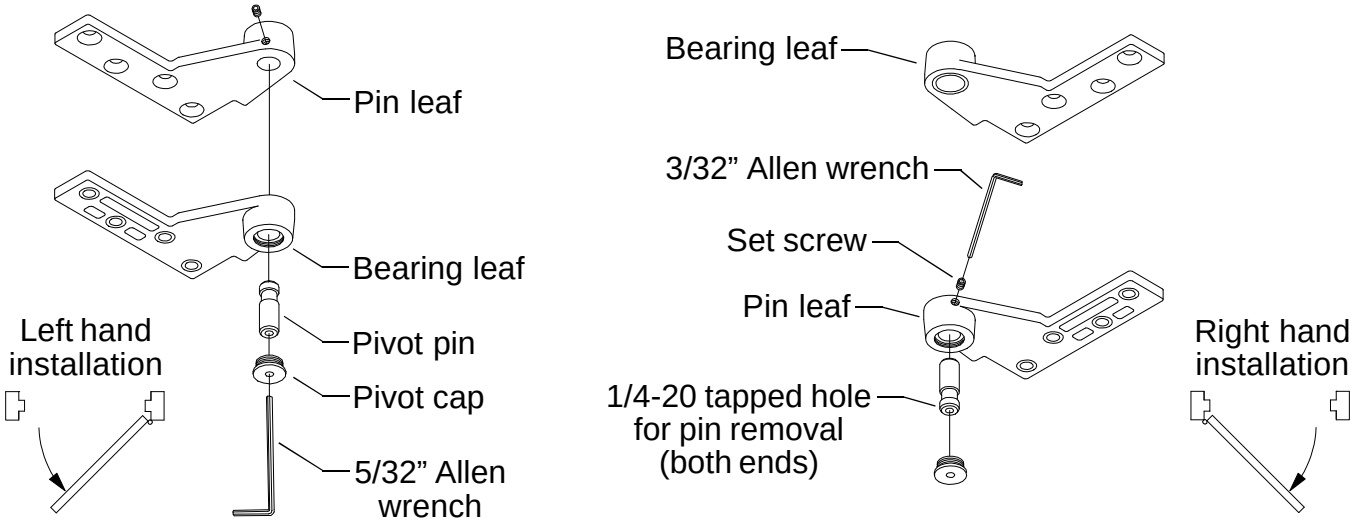


**1.** Prepare and mortise top of door and head jamb to receive pivot set. Determine pivot location using dimensions on reverse side. The pivots are non-handed. To determine hand of door and proper pivot position, see diagrams above.

**2.** Locate, drill, and tap 1/4-20 mounting holes for metal door or metal frame. Locate and drill pilot holes for #14 wood screws for wood door or wood frame. Install pivot leafs with 1/4-20 x 3/4” FHMS or #14 FHWS screws provided.

**3.** Loosen set screw in pin leaf with 3/32” Allen wrench provided and remove pivot pin.

**4.** Use 5/32” Allen wrench to remove pivot cap from door leaf, allowing for pivot pin re-insertion.

**5.** With door in open position (about 90° to jamb), carefully fit door onto bottom pivot at a slight angle. Tip door into vertical position, **aligning top pivot leafs in door and jamb.** With pivot leafs aligned, insert pivot pin into pivot set. **Vertically align groove in pivot pin with set screw in pivot leaf.** Tighten set screw securely with 3/32” Allen wrench. Re-install pivot cap.

**6.** To remove door from jamb: Remove pivot cap. Thread a 1/4-20 machine screw into end of pivot pin. Pull pivot pin out of pivots. Door can now be removed from opening.

**⚠ CAUTION**

Improper pivot set installation can lead to personal injury or property damage. Follow all instructions carefully. For questions contact Technical Support at 1-888-371-7331.


© 2006 Ingersoll-Rand Company Limited

Ingersoll Rand
Security Technologies

**NOTE**

It is very important for installer to verify that center line of top pivot point lines up with center line of bottom pivot point before final installation. Heel edge of door must be beveled 1/8” in 2” as shown below.

**NOTE**

Mortise depth for pivot leafs is 5/16”.

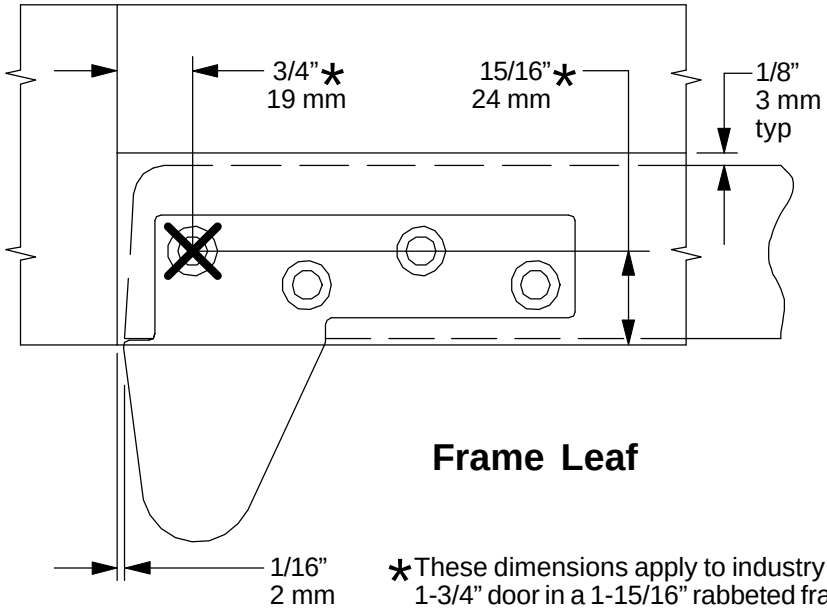


**Frame Leaf**

*These dimensions apply to industry standard 1-3/4” door in a 1-15/16” rabbeted frame. For other frame conditions, locate frame leaf of pivot identical to door leaf as shown below.

**Bevel heel edge of door 1/8” in 2” with 3/16” rad, typ**

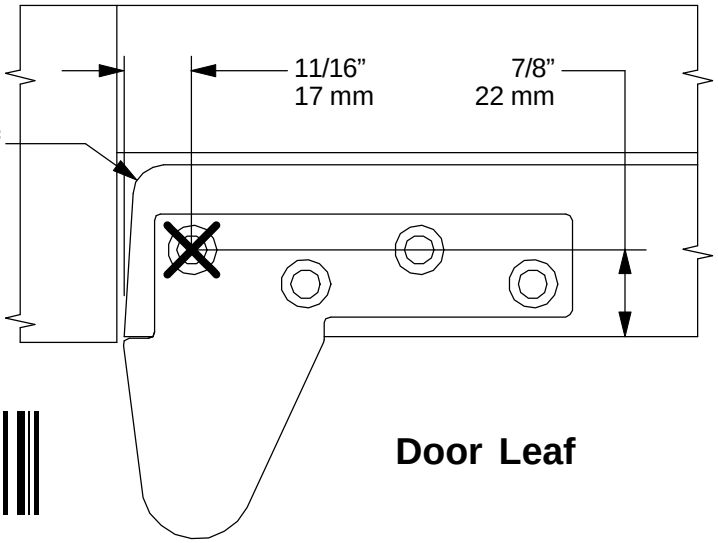


**Door Leaf**

**26674-00**