REL.5100 Universal Mortice Electric Strike – Medium Duty

The REL.5100 Electric Strike has been designed and manufactured to meet the needs of locksmiths and security professionals.

The universal nature of the strike means a smaller stock holding:

Application

- Three faceplates included for:

  Hollow metal frames
  Timber frames
  Aluminium frames

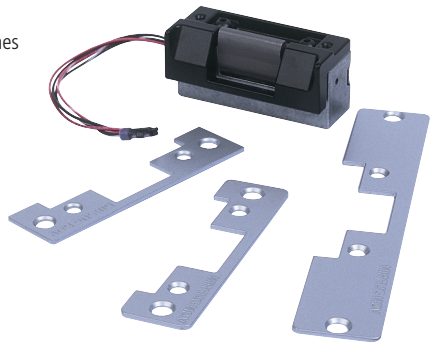

- Internal 12/24Vdc dual-voltage solenoid
- Adjustable keeper
- Fail Safe (FS) & Fail Secure (FSE) selectability

Durability

- Heavy duty construction
- Tamper resistant design
- Tested to over one million cycles
- 590 kilos holding strength

Where To Use The REL.5100 Electric Strike

This easy-to-install electric strike is suitable for medium duty applications where traffic flow control on internal or external doors is a requirement.

Dimensions

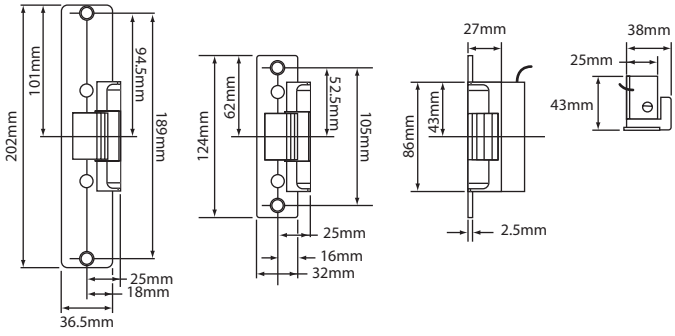

Versatility

The **solenoid** has four wires, allowing you to configure the strike at the job site for either **12Vdc or 24Vdc** applications.

The REL.5100 electric strike is easily changeable between **fail safe (FS) and fail secure (FSE)** in the field without the need for additional parts.

The REL.5100 electric strike has a 3.175mm **horizontally adjustable keeper**. The mechanism allows the installer to adjust the strike where a door and frame are not properly aligned or where weatherstripping is causing too much pressure on the strike.

Electrical Specification

Solenoid (Continuous Duty)	– 12Vdc
Current Holding (Seated)	– 380mA
Solenoid (Continuous Duty)	– 24Vdc
Current Holding (Seated)	– 190mA

Power Options

DC regulated power supplies (recommended)

REL.PS01 12Vdc 2 Amp Power Supply
REL.PS02 24Vdc 1 Amp Power Supply

To convert to **AC operation** use **SO-24 Kit**

Standard Configuration

24Vdc - Fail Secure (FSE)

Finishes

REL.5100-689 Aluminium
REL.5100-622 Black
REL.5100-625 Dark Bronze

Status Monitoring (not available on this model)